The Follo Line Project, EPC TBM

Follobanen, Tunnel. Doors & Airlocks. Technical Specification.

- ☐ Reviewed
- ☑ Reviewed with comments
- ☐ Not accepted. Revise and resubmit
- ☐ For information only

Svein Andersen
2019.02.14 09:18:06 +01'00'

Revision	Reason for issue	Date	Created by	Contr. by	Appr. by
05E	Issue for review	08.01.2019	MFB	IAU	JE
04E	Issue for review	09.08.2018	MFB	IAU	JE
03E	Issue for review	25.05.2018	MFB	IAU	JE
02E	Issue for review	13.12.2017	MFB	IAU	JE
00E	Issue for review	26.06.2017	MFB	SRL	JE

Title: **Follobanen, Tunnel. Doors & Airlocks. Technical Specification**	Pages: **18**	System:	8410 and 8430
		Area:	310 to 380
	Produced by:	AGJV / acciona / Ghella	
	Prod.doc.no:	Rev:	
	Replaces:		
	Replaced by:		

Project: The Follo Line Project, EPC Area: *30*	Document number: **UFB-30-A-65522**	Revision: **05E**
	DFO document number:	DFO rev.:

TABLE OF CONTENT

1 DOCUMENT INFORMATION 3
1.1 Document change log 3
1.1.1 Terminology 3
1.2 Reference list 3
2 INTRODUCTION 3
3 STANDARDS AND GUIDELINES 4
4 EQUIPMENT AND MATERIAL 4
4.1 Doors type 1 4
4.2 Doors type 2 5
4.2.1 Door type 2.1 6
4.3 Doors type 3 7
4.4 Doors type 4 7
4.5 Doors type 6 8
4.6 Doors type 7 9
4.7 Doors type 8 10
4.7.1 Doors type 8.1 10
4.7.2 Doors type 8.2 10
4.7.3 Doors type 8.3 11
4.7.4 Doors type 8.1R 11
4.8 Doors type 9 12
4.9 Doors type 10 13
4.10 Doors type 11 13
4.11 Doors type 12 14
4.12 Doors type 13 14
4.13 Removal panels 15
4.14 Signs 15
4.15 Rolling curtains 15
4.16 Doors type Gate (G1;G2) 17
ANNEX A: REMOVABLE PANEL CALCULATIONS 18

1 DOCUMENT INFORMATION

1.1 Document change log

Rev.	Change
00E	First official issue
01E	Updated with the Bane NOR comments, adding the following comments: colour of the door, taken into account the 100 N maximum force in all doors, “exit” and “no exit” signs, door type 9 shall be designed for external wind loads and the door type 9 shall be designed for the differential pressure.
02E	Updated Bane NOR´s comments: heating cable, differential pressure, rolling curtains
03E	Updated to add removable panel calculations, more specifications of rolling curtains. Updated Bane NOR´s comments: paragraph added about door close position for acceptance NOBO , signs standards and access control for T1 in 22+355. Independent verifier´s comments are added: EN15269 standard and type of monitoring system.
04E	Bane NOR´s comments: rolling curtains manual mode is specific and the gate name is added
05E	IV comments: Electrical motors IP. Bane NOR´s comments: The name of T8.1 type door will change to T8.1R, in rescue area to indicate the fire resistance.

1.1.1 Terminology

Company	Bane NOR SF
AGJV	Acciona Ghella Joint Venture
TBM	Tunnel boring machine
D&B	Drill and Blast
IV	Independent Verifier

1.2 Reference list

[1]	UFB-30-A-00018	The Follo Line Project. Technical Specification EPC TBM – Doors.
[2]	UFB-30-A-00015	The Follo Line Project. Technical Specification EPC TBM - Rescue Area Tunnel.
[3]	UOS-00-Q-90048	The Follo Line Project. Emergency concept.
[4]	UFB-30-A-00014	The Follo Line Project. Technical Specification EPC TBM – Smoke Control and Ventilation System.
[5]	UFB-30-A-65520	The Follo Line Project. Doors & Airlocks. Design manual.
[6]	UFB-30-A-65521	The Follo Line Project. Doors & Airlocks. Schedule.

2 INTRODUCTION

This document is to establish the technical specifications of:

- The doors

These specifications are complementary to the design manual “UFB-30-A-65520 The Follo Line Project. Follobanen, tunnel. Doors & Airlocks. Design Manual” [5] and “UFB-30-A-65521 The Follo Line Project. Follobanen, tunnel. Doors & Airlocks. Schedule” [6]

3 STANDARS AND GUIDELINES

Doors will be designed and constructed in accordance with all relevant laws, regulations and codes, in particular:

- SVV Handbook 018. Road Construction
- NS EN 10088-2:2014 – Stainless steels
- EN 13501-2:2009+A1:2010 - Fire classification of construction products and building elements - Part 2: Classification using data from fire resistance tests, excluding ventilation services
- EN 12426: Class 2 - Industrial, commercial and garage doors and gates - Air permeability - Classification.
- EN ISO 12944-2:1999 - Paints and varnishes. Protection of steel structures from corrosion by protective paint systems.
- TSI PRM 1300/2014
- TSI PRM 1303/2014
- Technical Regulations (TR)
- Norwegian National Rail Administration (NNRA)
- EN-1634-1:2016 - Fire resistance and smoke control tests for door and shutter assemblies, openable windows and elements of building hardware - Part 1: Fire resistance test for door and shutter assemblies and openable windows.
- EN-15269 - Extended application of test results for fire resistance and/or smoke control for door, shutter and openable window assemblies, including their elements of building hardware.

4 EQUIPMENT AND MATERIAL

4.1 Doors type 1

The doors type 1 shall be sliding with a minimum 1,4 m wide by 2 m high free opening. They will be single-leaf and the opening can be to right or left. The threshold will be 20 mm maximum.

They will be self-closing and will be opened them from both sides using a 100 N maximum force, taken into account 50-80 Pa differential pressure that can occur when operating the ventilation system during an emergency situation.

The doors will be secured in closed position, but able to be opened from both sides by evacuating persons.

A heating cable shall be provided in the freezing zones (See UFB-30-J-68437 layout).

The doors type 1 will be designed for a useful life: minimum 50 years for the structure and 25 years for the mechanical parts.

The anticorrosion quality for all door components, such as hinges frame, handles and fittings, will be 1.4404. Therefore all metal parts will be stainless steel.

The visible elements will be adequately coated and painted in green colour, G in the NCS colour system

The metallic door components will be earthed.

The leakage airflow will be 30 m^3/h maximum for a 100 Pa pressure difference. The doors will be designed for a 10 KPa nominal static load.

The doors will be fire resistant for 90 minutes minimum, in accordance with EN 13501-2 and EN 1634-1 (EI90).

Inside the cross passages, the maximum door temperature will not exceed 180°C and the average temperature will not exceed 140°C.

The fatigue load will be +/- 5 kPa and the number of cycles for fatigue calculations will be 10^7.

The door rail will bear the load of the door leaf and to absorb the horizontal forces onto the door due to train. The rail will be anchored to the cross passage wall.

The doors will be marked with exit signs (following the “signs standard”, see the 4.14 section).

Scada, through LVS system, will supervise the status of these doors to indicate whether the doors are opened or closed. The status will be performed through a magnetic reed switch or magnetic sensor, mounted in the edge of the door and door frame. The manufacturer will have to supply this mechanism in accordance with the door characteristics.

There are some cross passages from both entrances, at least 4,1 Km, affected by frosting. Therefore, the doors type 1 in these cross passages will have an in-built heating system to prevent frost. This heating cable will be provided by the doors manufacturer with all necessary accessories and elements and will be placed inside the door. Besides to collect the water produced by the frosting there will be a drainage channel with a stainless steel grill (see UFB-30-J-68437 layout). The collection of the water will be done through with a DN 110 mm PVC pipe from one side of the channel up to the manhole inside the cross passage.

This door will have a control access, only in the 22+355 cross passage. The control access will be performed with a holding magnet, Dorma EM7500 type.

All provided electrical equipment will be class IP66.

4.2 Doors type 2

The doors type 2 shall be sliding with a minimum 1,4 m wide by 2 m high free opening. They will be single-leaf and the opening will be to right or left. The threshold will be 20 mm maximum.

They will be self-closing and will be opened them from both sides using a 100 N maximum force, taken into account 50-80 differential pressure that can occur when operating the ventilation system during an emergency situation.

The doors will be secured in closed position, but able to be opened from both sides by evacuating persons.

The doors type 2 will be designed for a useful life: minimum 50 years for the structure and 25 years for the mechanical parts.

The anticorrosion quality for all door components, such as hinges frame, handles and fittings, will be 1.4404. Therefore all metal parts will be stainless steel.

The visible elements will be adequately coated and painted, using the followings colours:

- Cross passage side: green, G in the NCS colour system.
- Escape tunnel side: grey

The metallic door components will be earthed.

The leakage airflow will be 30 m^3/h maximum for a 100 Pa pressure difference.

The doors will be fire resistant for 60 minutes minimum, in accordance with EN 13501-2 and EN 1634-1 (EI60).

The overpressure will be +/- 5 kPa maximum.

The doors will be marked with “exit signs” on the cross passage side and “no exit signs” on the Escape tunnel side (following the “signs standard”, see the 4.14 section).

Scada, through LVS system, will supervise the status of these doors to indicate if the doors are opened or closed. The status will be performed through a magnetic reed switch or magnetic sensor, mounted in the edge of the door and door frame. The manufacturer will have to supply this mechanism in accordance with the door characteristics.

All provided electrical equipment will be class IP66.

Ref. comments from IV. The supplier must confirm that the double swing door can fulfil the contract requirements. (UFB-30-A-00018)

4.2.1 Door type 2.1

The door type 2.1 shall be swing with a minimum 1,4 m wide by 2 m high free opening. They will be double-leaf and the opening will be in both directions. The threshold will be 20 mm maximum.

They will be self-closing and will be opened them from both sides using a 100 N maximum force, taken into account 50-80 differential pressure that can occur when operating the ventilation system during an emergency situation.

The doors will be secured in closed position, but able to be opened from both sides by evacuating persons.

The door type 2.1 will be designed for a useful life: minimum 50 years for the structure and 25 years for the mechanical parts.

The anticorrosion quality for all door components, such as hinges frame, handles and fittings, will be 1.4404. Therefore all metal parts will be stainless steel.

The visible elements will be adequately coated and painted, using the followings colours:

- Interconnecting Hall side: green, G in the NCS colour system.
- Sydhavna tunnel side: grey

The metallic door components will be earthed.

The leakage airflow will be 30 m^3/h maximum for a 100 Pa pressure difference.

The door will be fire resistant for 60 minutes minimum, in accordance with EN 13501-2 and EN 1634-1 (EI60).

The overpressure will be +/- 5 kPa maximum.

The door will have a panic bar on the interconnecting hall side and a handle on the opposite side.

The doors will be marked with “exit signs” on the Interconnecting Hall side and “no exit signs” on the Sydhavna tunnel side (following the “signs standard”, see the 4.14 section).

Scada, through LVS system, will supervise the status of these doors to indicate whether the doors are opened or closed. The status will be performed through a magnetic reed switch or magnetic sensor, mounted in the edge of the door and door frame. The manufacturer will have to supply this mechanism in accordance with the door characteristics.

All provided electrical equipment will be class IP66.

4.3 Doors type 3

The doors type 3 shall be swing with a minimum 3,5 m wide by 2,5 m high free opening. They will be double-leaf with a wicket door 1,4 m wide by 2 m high. The wicket door will be asymmetric, one leaf 0,5 m wide by 2 m high and the other leaf 0,9 x 2 m. The threshold will be 20 mm maximum.

They will be self-closing and will be opened them from both sides using a 100 N maximum force, taken into account the 50-120 differential pressure that can occur when operating the ventilation system during an emergency situation. Therefore, an opening aid device will be incorporated at the wicket door and a drive system (electro-mechanical device) to open the swing doors. All necessary accessories and elements to open the door, as consequence of the needed of install the aid device and drive system, shall be supplied by the manufacturer.

The doors will be secured in closed position, but able to be opened from both sides by evacuating persons.

The doors type 3 will be designed for a useful life: minimum 50 years for the structure and 25 years for the mechanical parts.

The anticorrosion quality for all door components, such as hinges frame, handles and fittings, will be 1.4404. Therefore all metal parts will be stainless steel.

The visible elements will be adequately coated and painted, using the followings colours:
- Wicket door (escape route side): green, G in the NCS colour system.
- Wicket door (no escape route side) and the double-leaf door: grey

The metallic door components will be earthed.

The leakage proof to prevent smoke, dust and gas will be class 2 in accordance with EN 12426.

The overpressure will be +/- 500 Pa maximum.

The wicket door will have a panic bar on escape tunnel side and the opposite side will have a handle. It will be marked with “exit signs” on the escape route side and “no exit signs” on the no escape side (following the “signs standard”, see the 4.14 section).

Scada, through LVS system, will supervise the status of these doors to indicate whether the doors are opened or closed. The status will be performed through a magnetic reed switch or magnetic sensor, mounted in the edge of the door and door frame. The manufacturer will have to supply this mechanism in accordance with the door characteristics.

All provided electrical equipment will be class IP66.

4.4 Doors type 4

The doors type 4 shall be sliding with a minimum 1,8 m wide by 2 m high free opening. They will be single-leaf and the opening can be to right or left. The threshold will be 20 mm maximum.

They will be self-closing and will be opened them from both sides using a 100 N maximum force, taken into account the 50-80 differential pressure that can occur when operating the ventilation system during an emergency situation.

The doors will be secured in closed position, but able to be opened from both sides by evacuating persons.

The doors type 4 will be designed for a useful life: minimum 50 years for the structure and 25 years for the mechanical parts.

The anticorrosion quality for all door components, such as hinges frame, handles and fittings, will be 1.4404. Therefore, all metal parts will be stainless steel.

The visible elements will be adequately coated and painted, using the followings colours:
- Platform side: green, G in the NCS colour system.
- Waiting hall side: grey

The metallic door components will be earthed.

The leakage airflow will be 30 m^3/h maximum for a 100 Pa pressure difference. The doors will be designed for a 10 KPa nominal static load.

The doors will be fire resistant for 90 minutes minimum, in accordance with EN 13501-2 and EN 1634-1 (EI90).

Inside the cross passages, the maximum door temperature will not exceed 180°C and the average temperature will not exceed 140°C.

The fatigue load will be +/- 5 kPa and the number of cycles for fatigue calculations will be 10^7.

The door rail will bear the load of the door leaf and to absorb the horizontal forces onto the door due to train. It will be anchored to the wall.

The doors will be marked with “exit signs” on the platform side and “no exit signs” on the waiting hall side (following the “signs standard”, see the 4.14 section).

Scada, through LVS system, will supervise the status of these doors to indicate whether the doors are opened or closed. The status will be performed through a magnetic reed switch or magnetic sensor, mounted in the edge of the door and door frame. The manufacturer will have to supply this mechanism in accordance with the door characteristics.

All provided electrical equipment will be class IP66.

4.5 Doors type 6

The doors type 6 shall be swing with a minimum 3 m wide by 2,5 m high free opening. They will be double-leaf with two wicket door 0,9 m wide by 2 m high to let people to evacuate from the escape tunnel and the installation area north to the waiting hall side whereas the installation area south only used for maintenance and not for evacuation. The threshold will be 20 mm maximum

They will be self-closing and will be opened them from both sides using a 100 N maximum force, taken into account the 50-80 Pa differential pressure that can occur when operating the ventilation system during an emergency situation. Therefore, an opening device will be incorporated at the wicket door and a motor drive to open the swing doors. All necessary accessories and elements to open the door, as consequence of the needed of install the aid device and drive system, shall be supplied by the manufacturer.

The doors will be secured in closed position, but able to be opened from both sides by evacuating persons.

The doors type 6 will be designed for a useful life: minimum 50 years for the structure and 25 years for the mechanical parts.

The anticorrosion quality for all door components, such as hinges frame, handles and fittings, will be 1.4404. Therefore, all metal parts will be stainless steel.

The visible elements will be adequately coated and painted, using the followings colours:

- Wicket door (escape route side) in the installation area north: green, G in the NCS colour system.
- Wicket door (no escape route side) in the installation area south and the double-leaf door, both the installation area north and in the installation area south: grey.

The metallic door components will be earthed.

The leakage proof to prevent smoke, dust and gas will be class 2 in accordance with EN 12426.

The doors will be fire resistant for 90 minutes minimum, in accordance with EN 13501-2 and EN 1634-1 (EI90).

The wicket door will be marked with “exit signs” on the installations area side north and “no exit signs” on the waiting hall side and in the installations area side south (following the “signs standard”, see the 4.14 section).

Scada, through LVS system, will supervise the status of these doors to indicate whether the doors are opened or closed. The status will be performed through a magnetic reed switch or magnetic sensor, mounted in the edge of the door and door frame. The manufacturer will have to supply this mechanism in accordance with the door characteristics.

All provided electrical equipment will be class IP66.

Ref. comments from IV. The supplier must confirm that the double swing door can fulfil the contract requirements. (UFB-30-A-00018)

4.6 Doors type 7

The doors type 7 shall be swing with a minimum 1,8 m wide by 2 m high free opening. They will be double-leaf and the opening will be in both directions. The threshold will be 20 mm maximum.

They will be self-closing and will be opened them from both sides using a 100 N maximum force, taken into account the 50-80 Pa differential pressure that can occur when operating the ventilation system during an emergency situation.

The doors will be secured in closed position, but able to be opened from both sides by evacuating persons.

The doors type 7 will be designed for a useful life: minimum 50 years for the structure and 25 years for the mechanical parts.

The anticorrosion quality for all door components, such as hinges frame, handles and fittings, will be 1.4404. Therefore all metal parts will be stainless steel.

The visible elements will be adequately coated and painted in green colour, G in the NCS colour system.

The metallic door components will be earthed.

The leakage airflow will be 30 m^3/h maximum for a 100 Pa pressure difference.

The doors will be fire resistant for 60 minutes minimum, in accordance with EN 13501-2 and EN 1634-1 (EI60).

The overpressure will be +/- 5 kPa maximum.

The doors will have a panic bar on the both sides.

They will be marked with exit signs on both sides (following the “signs standard”, see the 4.14 section).

Scada, through LVS system, will supervise the status of these doors to indicate whether the doors are opened or closed. The status will be performed through a magnetic reed switch or magnetic sensor, mounted in the edge of the door and door frame. The manufacturer will have to supply this mechanism in accordance with the door characteristics.

All provided electrical equipment will be class IP66.

4.7 Doors type 8

4.7.1 Doors type 8.1

The doors type 8.1 shall be swing with a minimum 1,8 m wide by 2,1 m high free opening. They will be double-leaf and the opening will be in one direction and outwards.

They will be self-closing and will be opened them from both sides using a 100 N maximum force, taken into account the 30 Pa differential pressure.

The doors type 8.1 will be designed for a useful life: minimum 50 years for the structure and 25 years for the mechanical parts.

The anticorrosion class will be C4 according to NS-EN ISO 12944-2.

The visible elements will be adequately coated and painted in grey colour.

The metallic door components will be earthed.

The doors will be opened with an access control system, through a Bewator device. The door mortice shall be an electrical lock, EL-580, as well as it will have an in-built cylinder lock to be opened manually with a key in case of loss of electrical power and there will be an emergency button inside the room. The doors will have a vertical panic bar on the technical room side and the cross passage side will have a handle.

They will be marked with exit signs on the technical room side and “no exit signs” on the walkway side (following the “signs standard”, see the 4.14 section).

All provided electrical equipment will be class IP66.

4.7.2 Doors type 8.2

The doors type 8.2 shall be swing with a minimum 1 m wide by 2, 2 m high free opening. They will be single-leaf and the opening will be in one direction and outwards.

They will be self-closing and will be opened them from both sides using a 100 N maximum force, taken into account the 30 Pa differential pressure.

The doors type 8.2 will be designed for a useful life: minimum 50 years for the structure and 25 years for the mechanical parts.

The anticorrosion class will be C4 according to NS-EN ISO 12944-2.

The visible elements will be adequately coated and painted in grey colour.

The metallic door components will be earthed.

The doors will be opened with an access control system, through a Bewator device. The door mortice shall be an electrical lock, EL-582, as well as it will have an in-built cylinder lock to be opened manually

with a key in case of loss of electrical power and there will be an emergency button inside the room. The doors will have a panic bar on the technical room side and the cross passage side will have a handle.

They will be marked with exit signs on the technical room side and “no exit signs” on the walkway side (following the “signs standard”, see the 4.14 section).

All provided electrical equipment will be class IP66.

4.7.3 Doors type 8.3

The doors type 8.3 shall be swing with a minimum 0,9 m wide by 2,1 m high free opening. They will be single-leaf and the opening will be in one direction and outwards.

They will be self-closing and will be opened them from both sides using a 100 N maximum force, taken into account the 30 Pa differential pressure that can occur when operating the ventilation system during an emergency situation.

The doors type 8.3 will be designed for a useful life: minimum 50 years for the structure and 25 years for the mechanical parts.

The anticorrosion class will be C4 according to NS-EN ISO 12944-2.

The visible elements will be adequately coated and painted in grey colour.

The metallic door components will be earthed.

They will be marked with exit signs.

The doors will be opened with an access control system, through a Bewator device. The door mortice shall be an electrical lock, EL-582, as well as it will have an in-built cylinder lock to be opened manually with a key in case of loss of electrical power and there will be an emergency button inside the room. The doors will have a panic bar on the technical room side and the cross passage side will have a handle.

They will be marked with exit signs on the technical room side and “no exit signs” on the walkway side (following the “signs standard”, see the 4.14 section).

All provided electrical equipment will be class IP66.

4.7.4 Doors type 8.1R

The doors type 8.1R shall be swing with a minimum 1,8 m wide by 2,1 m high free opening. They will be double-leaf and the opening will be in one direction and outwards.

They will be self-closing and will be opened them from both sides using a 100 N maximum force, taken into account the 30 Pa differential pressure.

The doors type 8.1 will be designed for a useful life: minimum 50 years for the structure and 25 years for the mechanical parts.

The anticorrosion class will be C4 according to NS-EN ISO 12944-2.

The visible elements will be adequately coated and painted in grey colour.

The metallic door components will be earthed.

The doors will be opened with an access control system, through a Bewator device. The door mortice shall be an electrical lock, EL-580, as well as it will have an in-built cylinder lock to be opened manually

with a key in case of loss of electrical power and there will be an emergency button inside the room. The doors will have a vertical panic bar on the technical room side and the cross passage side will have a handle.

They will be marked with exit signs on the technical room side and “no exit signs” on the walkway side (following the “signs standard”, see the 4.14 section).

All provided electrical equipment will be class IP66.

The doors will be fire resistant for 60 minutes minimum, in accordance with EN 13501-2 and EN 1634-1 (EI60).

4.8 Doors type 9

The door type 9 shall be swing with a minimum 4,2 m wide by 4,9 m high free opening. They will be double-leaf with a wicket door 0,9 m by 2 m high.

They will be self-closing and will be opened them from both sides using a 100 N maximum force, taken into account the 120 Pa differential pressure that can occur when operating the ventilation system during an emergency situation. Therefore, an opening device will be incorporated at the wicket door and a motor drive to open the swing doors. All necessary accessories and elements to open the door, as consequence of the needed of install the aid device and drive system, shall be supplied by the manufacturer.

A heating cable shall be provided in the freezing zones. Therefore, the door type 9 will have an in-built heating system to prevent frost. This heating cable will be provided by the doors manufacturer and will be inside the door.

The door type 9 will be designed for a useful life: minimum 50 years for the structure and 25 years for the mechanical parts.

The visible elements will be adequately coated and painted, using the followings colours:

- Wicket door, permanent tunnel side: green, G in the NCS colour system.
- Wicket door outside and the double-leaf door: grey.

The metallic door components will be earthed.

The anticorrosion class will be C4 according to NS-EN ISO 12944-2.

The port will have dampers for the ventilation system to allow a supply air volume of 70 m^3/h. The ventilation air will be supplied by a dampers or grilles installed on the wall beside the door and not installed on the door.

The port will be designed for the differential pressure that can occur when operating the ventilation system during an emergency.

The port will be designed for external wind loads.

The wicket door will be marked with “exit signs” on the permanent tunnel side (following the “signs standard”, see the 4.14 section).

The doors will be opened with an access control system, through a Bewator device. The door mortice shall be an electrical lock, EL-582, as well as it will have an in-built cylinder lock to be opened manually with a key in case of loss of electrical power and there will be an emergency button inside the room.
The wicket door will have a panic bar on permanent access tunnel side and the opposite side will have a handle.

Scada, through LVS system, will supervise the status of these doors to indicate whether the doors are opened or closed.

All provided electrical equipment will be class IP66.

4.9 Doors type 10

The doors type 10 shall be swing with a minimum 0,9 m wide by 2,1 m high free opening. They will be single-leaf and the opening will be in one direction.

They will be self-closing and will be opened them from both sides using a 100 N maximum force

The doors type 10 will be designed for a useful life: minimum 50 years for the structure and 25 years for the mechanical parts.

The anticorrosion quality for all door components, such as hinges frame, handles and fittings, will be 1.4404. Therefore, all metal parts will be stainless steel.

The visible elements will be adequately coated and painted in grey colour.

The metallic door components will be earthed.

The leakage airflow will be 30 m^3/h maximum for a 100 Pa pressure difference. The door will be designed for a 10 KPa nominal static load.

The doors will have a handle and a cylinder lock.

Scada, through LVS system, will supervise the status of these doors to indicate whether the doors are opened or closed. They will be marked with exit signs on the technical room side and “no exit signs” on the walkway side (following the “signs standard”, see the 4.14 section).

They will be marked with exit signs and “no exit signs” on the tunnel side (following the “signs standard”, see the 4.14 section).

All provided electrical equipment will be class IP66.

4.10 Doors type 11

The doors type 11 shall be sliding with a minimum 2 m wide by 2,5 m high free opening.

They will be self-closing and will be opened them from both sides using a 100 N maximum force, taken into account the 50 Pa differential pressure that can occur when operating the ventilation system during an emergency situation.

The doors type 11 will be designed for a useful life: minimum 50 years for the structure and 25 years for the mechanical parts.

The anticorrosion class will be C4 according to NS-EN ISO 12944-2.

The visible elements will be adequately coated and painted in grey colour.

The metallic door components will be earthed.

The doors will be opened with an access control system, through a Bewator device. The door mortice shall be an electrical lock, as well as it will have an in-built cylinder lock to be opened manually with a key in case of loss of electrical power and there will be an emergency button inside the room.

Scada, through LVS system, will supervise the status of these doors to indicate whether the doors are opened or closed. They will be marked with exit signs on the technical room side and “no exit signs” on the walkway side (following the “signs standard”, see the 4.14 section).

They will be marked with exit signs on the technical room side and “no exit signs” on the Escape tunnel side (following the “signs standard”, see the 4.14 section).

All provided electrical equipment will be class IP66.

4.11 Doors type 12

The door type 12 shall be swing with a minimum 0,9 m wide by 2,1 m high free opening. They will be single-leaf and the opening will be in one direction and outwards.

They will be self-closing and will be opened them from both sides using a 100 N maximum force, taken into account the differential pressure that can occur when operating the ventilation system during an emergency situation.

The door type 12 will be designed for a useful life: minimum 50 years for the structure and 25 years for the mechanical parts.

The anticorrosion class will be C4 according to NS-EN ISO 12944-2.

The visible elements will be adequately coated and painted in a colour depends of the building code.

The metallic door components will be earthed.

The doors will be opened with an access control system, through a Bewator device. The door mortice shall be an electrical lock, EL-580, as well as it will have an in-built cylinder lock to be opened manually with a key in case of loss of electrical power and there will be an emergency button inside the room. The doors will have a panic bar on the technical room side and the technical room side will have a handle.

They will be marked with exit signs (following the “signs standard”, see the 4.14 section).

This type of door will be similar to type T8.3 therefore for more details see UFB-30-J-68444 drawing.

All provided electrical equipment will be class IP66.

4.12 Doors type 13

The door type 13 shall be swing with a minimum 1,8 m wide by 2,1 m high free opening. They will be single-leaf and the opening will be in one direction and outwards.

They will be self-closing and will be opened them from both sides using a 100 N maximum force, taken into account the differential pressure that can occur when operating the ventilation system during an emergency situation.

The door type 13 will be designed for a useful life: minimum 50 years for the structure and 25 years for the mechanical parts.

The anticorrosion class will be C4 according to NS-EN ISO 12944-2.

The visible elements will be adequately coated and painted in a colour depends of the building code.

The metallic door components will be earthed.

The doors will be opened with an access control system, through a Bewator device. The door mortice shall be an electrical lock, EL-580, as well as it will have an in-built cylinder lock to be opened manually with a key in case of loss of electrical power and there will be an emergency button inside the room. The doors will have a panic bar on the technical room side and the technical room side will have a handle.

They will be marked with exit signs (following the “signs standard”, see the 4.14 section).

This type of door will be similar to type T8.1 therefore for more details see UFB-30-J-68444 drawing.

All provided electrical equipment will be class IP66.

4.13 Removal panels

The removal panels shall be 2,5 m wide by 2,5 m high and a 1,4 m by 2 m minimum free opening, (although depends on the T1 door dimensions needed to get these free openings).

The removal panels will be designed for a useful life: minimum 50 years for the structure and 25 years for the mechanical parts.

The anticorrosion quality for all door components, such as hinges frame, handles and fittings, will be 1.4404.

The visible elements will be adequately coated and painted in grey colour.

The metallic removal panel components will be earthed.

The leakage airflow will be 30 m^3/h maximum for a 100 Pa pressure difference. The removal panel will be designed for a 10 KPa nominal static load.

The removal panels will be fire resistant for 90 minutes minimum, in accordance with EN 13501-2 and EN 1634-1 (EI90).

The fatigue load will be +/- 5 kPa and the number of cycles for fatigue calculations will be 10^7.

4.14 Signs

All doors leading to emergency exists or cross-passages shall be marked in accordance with TSI-STR 4.2.1.5.5 (subsection f) and 4.12 and 4.13 Sings section of Technical Regulations (TR).

The section of TR where this is indicated is: Sings / 515. Placement of signs along the track / 5. Sign sheet / 4. Sign of the third part / 4.12 and 4.13:

- 4.12: Tunnel escape signs, right hand emergency exit marking
- 4.13: Tunnel escape signs, left hand emergency exit marking

The link is :https://trv.jbv.no/wiki/Skilt/Plassering_av_skilt_langs_sporet/Skiltoversikt (Title: Skilt/Plassering av skilt langs sporet/Skiltoversikt)

4.15 Rolling curtains

The Telecom and LVS rooms will be enclosed with a perforated metal rolling shutters.

The operation of this rolling curtains will be:

- Automatic mode
    1. Card reader, with a Bewator device, to be used to “unlock” or activate the system.
    2. Button "a" located outside the room to be pressed (once) to get the shutter lifted up by the motor.
    3. Shutter automatically locked (by the engine) once it is completely rolled up (it cannot fall down)
    4. Button "b" located outside the room to be pressed so that the motor starts unrolling the shutter to close the room. (the finger must be kept pressing the button till the shutter is completely closed or unrolled. otherwise the shutter will automatically stop till the button is pressed again or until the shutter is manually wound down. This minimizes the risk of an accident).

  In the event of a power failure during the automatic operation of the curtain, the shutter will automatically stop and must be manually coiled up or down.

- Manual mode. Mode used only for authorized maintenance personal, not accessible for unauthorized personal:
    1. Crank handle to be used to "unlock" the system.
    2. Shutter to be lifted up manually and rolled upwards till it is in its upper position.
    3. Shutter to be lifted down to close the room. The shutter will remain in the same position till it is unrolled manually by the operator.

  During the manual mode the shutter just rolls while the operator lifts it up or down. Otherwise, without being lifted, it doesn't roll or move by its own.

The general characteristics of the rolling curtains will be:

- Slats:
    - They are made of steel and extruded aluminium.
    - They are interlocked to form a curtain.
    - They can be single-sided or double-sided. If they are single-faced the slats can be flat or curved.
    - They will be non-insulated as HVAC calculations have been made on this basis.
    - They are perforated with perforations of Ø = 5mm.
    - Bottom slats will be cut to fit the 1%-slope raised floor.

- Guiderails:
    - They are structural guiderail profiles.
    - They are made of extruded aluminium to avoid galvanic couple with slats.
    - They will be anchored to bottom and top concrete structure.
    - They will be reinforced with an additional rectangular tube.

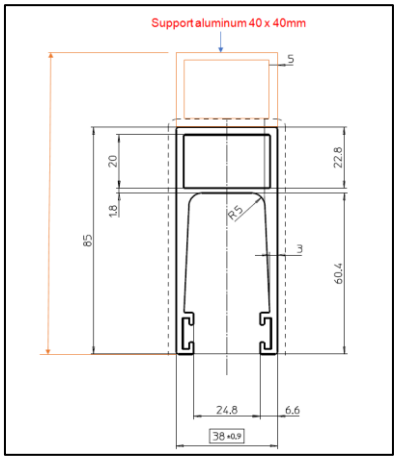

Image of a guide rail

- Fixing and anchoring systems will be done in accordance to manufacturer instructions.
- They are motor equipped. The motor is recessed within the counterbalance. The electrical characteristics of the motor are: 740 W power consumption, 230 V and 3,5 A.
- They are equipped with card-reader access control system.
- Sheet metal hood covering curtain coil and counterbalance mechanism can be optional.
- Finish: aluminium can be anodized or coated.
- The net opening height will be, at least, 2.5 m, when the shutter is fully open.
- Maximum exterior width is 7800 mm (from rail to rail), although it will depend on each room's size in accordance with the layouts from UFB-30-X-66050 to UFB-30-X-66064.

For more details see the UFB-30-J-65070 and UFB-30-J-65071 drawings.

4.16 Doors type Gate (G1;G2)

This door will be placed in the Auxiliary and the Adit tunnels to secure them.

The gate G1 and G2 shall be swing with a minimum 3,5 m wide by 3,2 m high free opening. They will be double-leaf with a wicket door 0,9 m wide by 2 m high. The threshold will be 20 mm maximum.

The gate will be designed for a useful life: minimum 50 years for the structure and 25 years for the mechanical parts.

The anticorrosion class will be C4 according to NS-EN ISO 12944-2.

The metallic door components will be earthed.

The visible elements will be adequately coated and painted in grey colour.

The metallic door components will be earthed.

The doors will have a panic bar on the Telecom rooms side or on the interior of the Auxiliary tunnel side and the opposite side will have a handle.

They will be marked with exit signs on the technical room side and "no exit signs" on the walkway side (following the "signs standard", see the 4.14 section).

The doors, G1, located in the Adit Tunnel (North/South) will be opened with an access control system, through a Bewator device. The door mortice shall be an electrical lock, EL-582, as well as it will have an in-built cylinder lock to be opened manually with a key in case of loss of electrical power and there will be an emergency button inside the room. However, the doors, G2, located in the Auxiliary Tunnel (North/South) will not have access control, only a cylinder lock.

ANNEX A: REMOVABLE PANEL CALCULATIONS

On hold : This annex will include the structural calculations of the removable panel.